Physics 2110: Midterm Exam I

(Dated: September 18, 2009)

Each problem is worth 10 points.

1. A cube of unit volume is placed so that one corner is at the origin and three edges are along x-, y-, and z-axes of a coordinate system, see Figure 1. Use vectors to compute (a) the angle between the line ac (vector $\vec{ac} = \vec{C}$) and the diagonal from the origin to the opposite corner (vector $\vec{ad} = \vec{D}$). (b) Find vector $\vec{A}$ which is orthogonal to both $\vec{C}$ and $\vec{D}$.

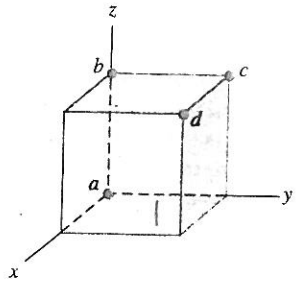

2. A rocket is fired vertically up from the launch pad from rest but with constant acceleration of $a = 3.50\ m/s^2$ upward. At $t_1 = 10.0$ s after launch the rocket uses up all of its fuel and from that moment on is moving only under the influence of gravity. (a) Find rocket's velocity and altitude above the launch pad at time t_1. (b) Find the maximum height that the rocket reaches above the launch pad and the time t_2 is takes it to get there.

3. Two cars, A and B, travel in a straight line. The distance of A from the starting point is given as a function of time by $x_A(t) = \alpha t + \beta t^2$, with $\alpha = 2.60\ m/s$ and $\beta = 1.20\ m/s^2$. The distance of B from the starting point is $x_B(t) = \gamma t^2 - \delta t^3$, with $\gamma = 2.80\ m/s^2$ and $\delta = 0.20\ m/s^3$. (a) Which car is ahead just after they leave the starting point? (a) At what times are the cars at the same point? (c) At what times do A and B have the same acceleration?

4. In U.S. football, after a touchdown the team has the opportunity to earn one more point by kicking the ball over the bar between the goal posts. The bar is 10.0 ft (3.05 m) above the ground, and the ball is kicked from the ground level, 36.0 ft (11.0 m) horizontally from the bar (Figure 2). (a) There is a minimum angle above the ground such that if the ball is launched below this angle, it can never clear the bar, no matter how fast it is kicked. What is this angle? (a) If the ball is kicked at 45.0° above the horizontal, what must its initial speed be if it to just clear the bar?

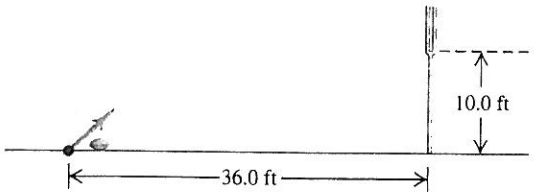
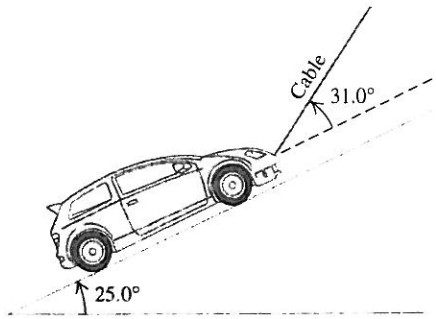
5. A 1130-kg car is held in place by a light cable on a very smooth (frictionless) ramp, as shown in Figure 3. The cable makes an angle 31.0° above the surface of the ramp, and the ramp itself rises at 25.0° above the horizontal. (a) Draw a free-body diagram for the car. (b) Find the tension in the cable. (c) How hard does the surface of the ramp push on the car? (d) What would be car's acceleration if the cable breaks?